Tradition

Kitchen Mixer

Article no.:	371200000	**EAN no.:**	5708516817512
Finish:	Chrome		
Series:	Tradition		

Standard features:

Ceramic cartridge
Scalding protection (38ºC)
Swivel spout
120° swivel limitation
Dual function spray head
Rub-clean aerator
Cold-start
Eco-Save water saving feature
1 handle

Product features

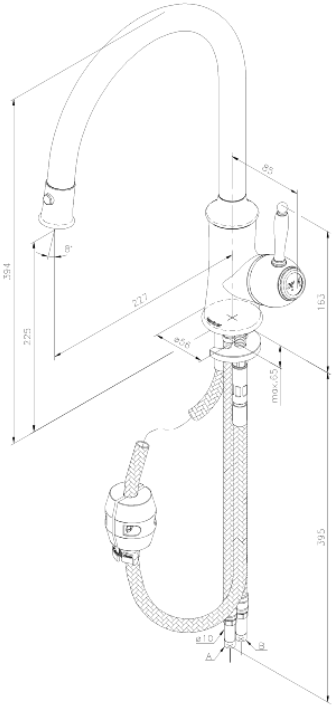

FM Mattsson Mora Group Denmark
Abildager 26 A, 2605 Brøndby, Denmark
Østbirkvej 2, 5240 Odense NØ, Denmark

+45 63 10 22 10 danmark@fmm-mora.com

For more information please visit www.damixa.com

damixa